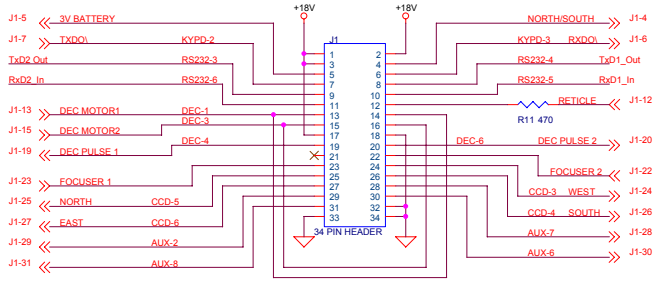

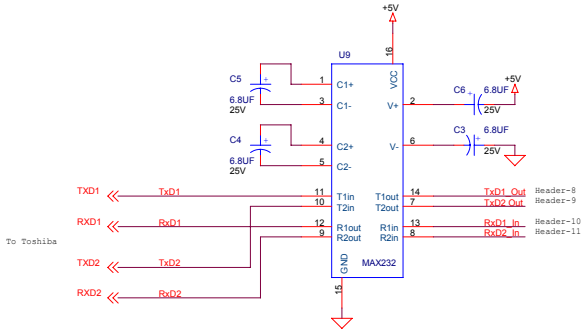

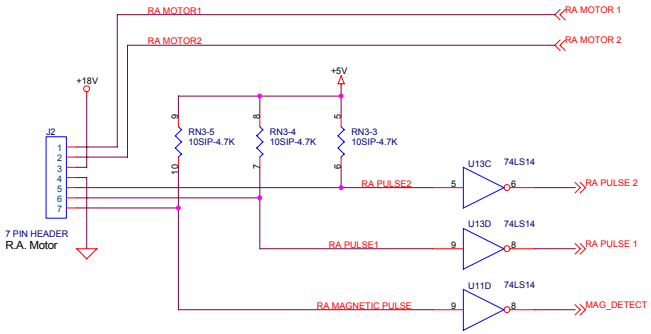

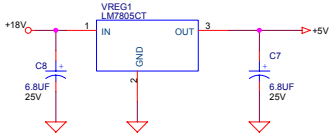

TelescopeService.com		
Title: MEADE LX200 Classic - Main Board: Sheet 2		
Size: C	Document Number: {Doc}	Rev: C
Date: Monday, June 07, 2004	Sheet 2 of 3	